price®

Submittal Sheet

SCD-FR SQUARE CONE DIFFUSER FIRE RATED ASSEMBLY

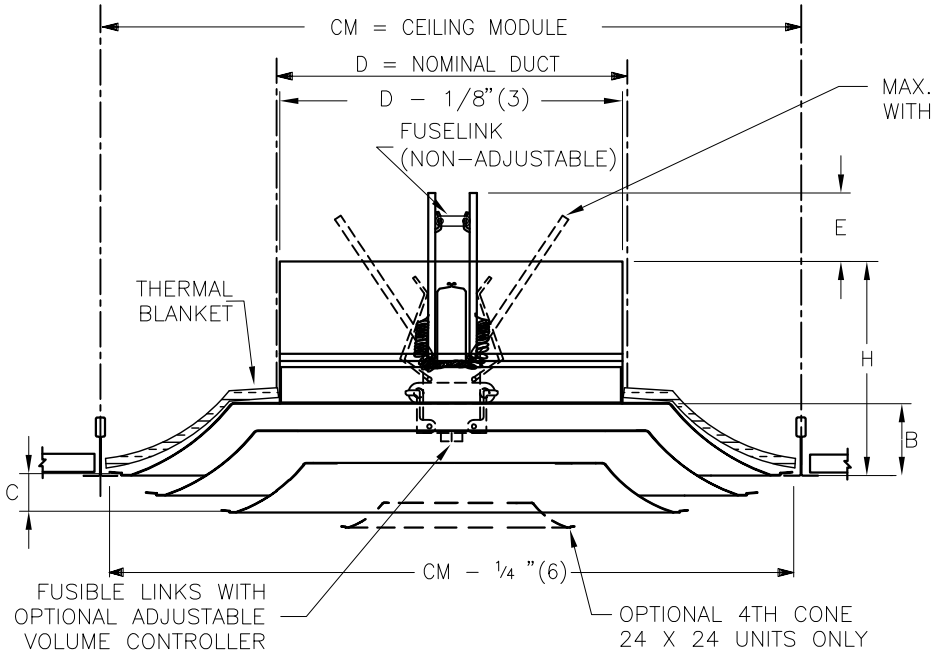

☐ **3P T-BAR PANEL**

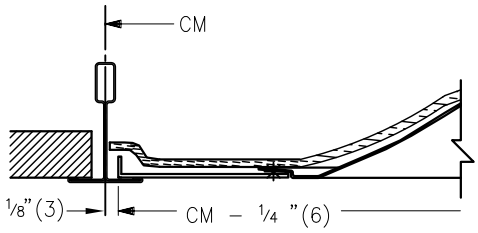

	DIFFUSER SIZE 12X12	DIFFUSER SIZE 300x300	CM=NOM. PANEL SIZE MODULES	
☐			24X12	600X300
☐			20X20 24X24	500x500 600X600

IMPERIAL UNITS (inches)

	CM	B	C	H	DUCT SIZE
☐	24x24	2½	1 1/16	6 9/16	6,8,10,12,14,15
☐	20X20	2½	½	6 9/16	6,8,10
☐	12x12	1⅛	1 1/16	5 3/16	5,6,7,8

SI UNITS (mm)

	CM	B	C	H	DUCT SIZE
☐	600x600	64	27	167	152,203,254,305,356,381
☐	500x500	64	13	167	152,203,254
☐	300x300	29	27	132	127,152,178,203

ROUND NECK	
NOM. DUCT	E
5 (127)	½ (13)
6 (152)	1 (25)
7 (178)	1½ (51)
8 (203)	2 (51)
10 (254)	3 (76)
12 (305)	4 (102)
14 (356)	5 (127)
15 (381)	5½ (140)

MATERIAL:

- STEEL CONSTRUCTION
- CEILING RADIATION DAMPER: GALVANIZED STEEL, BUTTERFLY TYPE
- THERMAL BLANKET: NON ASBESTOS

FINISH:

☐ B12 WHITE
(OPTIONAL FINISHES AVAILABLE)

OPTION:

☐ ADJUSTABLE VOLUME CONTROLLER (ALLEN KEY ADJUSTABLE)
☐ 165°F (74°C) FUSIBLE LINK (STANDARD)
☐ 212°F (100°C) FUSIBLE LINK

NOTE:

- FIRE RATED 3 HOUR.
- UL CLASSIFIED FIRE RATED CEILING DIFFUSER ASSEMBLY. LISTED IN UNDERWRITERS LABORATORIES FIRE RESISTANCE DIRECTORY.
- ULC CLASSIFIED FIRE RATED CEILING DIFFUSER ASSEMBLY. LISTED IN UNDERWRITERS OF CANADA LABORATORIES LIST OF EQUIPMENT AND MATERIALS.
- DUCT: STEEL OR FLEXIBLE DUCT CONNECTIONS (BY OTHERS) AS PER FIRE RATED DESIGN REQUIREMENTS.
- INSTALLATION INSTRUCTIONS: 228791 OR FOR PANEL SEE SUBMITTAL 233667
- FIRE RATED DIFFUSERS ARE TO BE INSTALLED IN FIRE RATED T−BAR APPLICATIONS ONLY.

CLASSIFIED C UL US

ALL METRIC DIMENSIONS ( ) ARE SOFT CONVERTED. IMPERIAL DIMENSIONS ARE CONVERTED TO METRIC AND ROUNDED TO THE NEAREST MILLIMETER.

PROJECT:		price®	
ENGINEER:		MJ	**SCD-FR** SQUARE CONE DIFFUSER FIRE RATED ASSEMBLY
CUSTOMER:		228719	
SUBMITTAL DATE:	**SPEC. SYMBOL:**	2015/03/31	

© Copyright PRICE INDUSTRIES 2015

REV E

price®

Submittal Sheet

SCDA-FR SQUARE CONE DIFFUSER FIRE RATED ASSEMBLY

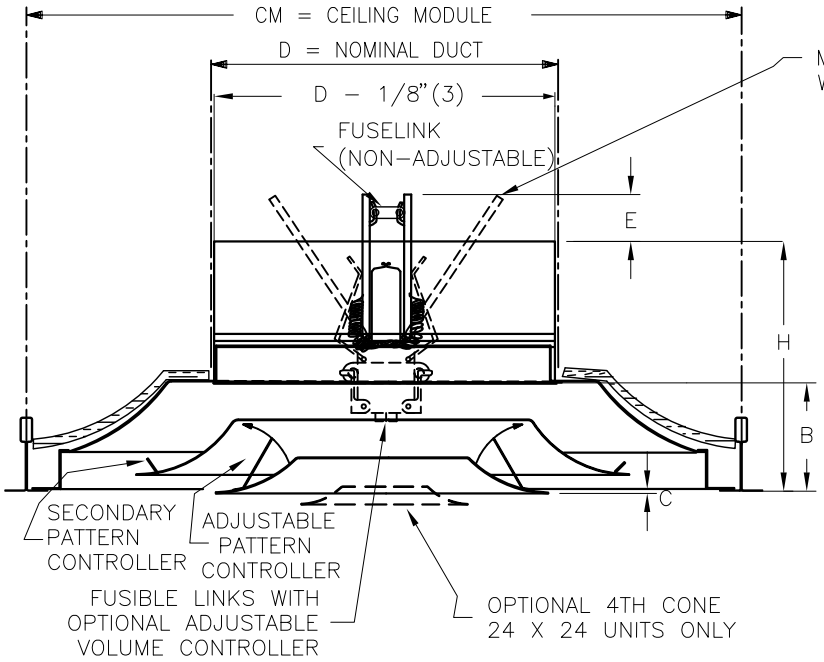

☐ **3P T-BAR PANEL**

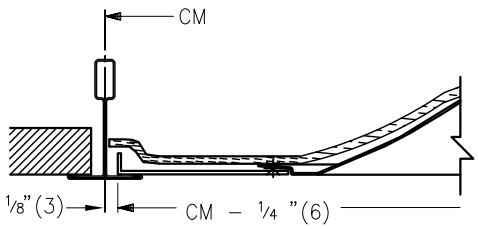

	DIFFUSER SIZE 12X12 / 300X300	CM=NOM. PANEL SIZE MODULES	
☐		24X12	600X300
☐		20X20 24X24	500x500 600x600

IMPERIAL UNITS (inches)

	CM	B(MAX)	C(MAX)	H(MAX)	DUCT SIZE
☐	24x24	3¾	⅛	7 13/16	6,8,10,12,14,15*
☐	20X20	2⅞	–	6 15/16	6 *,8*,10*
☐	12x12	1¾	⅝	5⅞	5,6,7,8*

SI UNITS (mm)

	CM	B(MAX)	C(MAX)	H(MAX)	DUCT SIZE
☐	600x600	95	3	198	152,203,254,305,356,381*
☐	500x500	73	–	176	152*, 203*, 254*
☐	300x300	44	16	149	127,152,178,203*

ROUND NECK	
NOM. DUCT	E
5 (127)	½ (13)
6 (152)	1 (25)
7 (178)	1½ (51)
8 (203)	2 (51)
10 (254)	3 (76)
12 (305)	4 (102)
14 (356)	5 (127)
15 (381)	5½ (140)

MATERIAL:

- STEEL CONSTRUCTION
- CEILING RADIATION DAMPER: GALVANIZED STEEL, BUTTERFLY TYPE
- THERMAL BLANKET: NON ASBESTOS

FINISH:

☐ B12 WHITE
(OPTIONAL FINISHES AVAILABLE)

OPTION:

☐ ADJUSTABLE VOLUME CONTROLLER (ALLEN KEY ADJUSTABLE)
☐ 165°F (74°C) FUSIBLE LINK (STANDARD)
☐ 212°F (100°C) FUSIBLE LINK

NOTE:

- SECONDARY PATTERN CONTROLLERS WILL BE SUPPLIED ON UNITS INDICATED WITH (*)
- B, C & H DIMENSIONS VARY DEPENDING ON NECK SIZE.
- FIRE RATED 3 HOUR.
- UL CLASSIFIED FIRE RATED CEILING DIFFUSER ASSEMBLY. LISTED IN UNDERWRITERS LABORATORIES FIRE RESISTANCE DIRECTORY.
- ULC CLASSIFIED FIRE RATED CEILING DIFFUSER ASSEMBLY. LISTED IN UNDERWRITERS OF CANADA LABORATORIES LIST OF EQUIPMENT AND MATERIALS.
- DUCT: STEEL OR FLEX DUCT CONNECTIONS (BY OTHERS) AS PER FIRE RATED DESIGN REQUIREMENTS.
- INSTALLATION INSTRUCTIONS: 228791 OR FOR PANEL SEE SUBMITTAL 233667
- FIRE RATED DIFFUSERS ARE TO BE INSTALLED IN FIRE RATED T–BAR APPLICATIONS ONLY.

CLASSIFIED C UL US

ALL METRIC DIMENSIONS ( ) ARE SOFT CONVERTED. IMPERIAL DIMENSIONS ARE CONVERTED TO METRIC AND ROUNDED TO THE NEAREST MILLIMETER.

PROJECT:		price®	
ENGINEER:		MJ	**SCDA-FR** SQUARE CONE DIFFUSER FIRE RATED ASSEMBLY
CUSTOMER:		228720	
SUBMITTAL DATE:	**SPEC. SYMBOL:**	2015/03/31	

© Copyright PRICE INDUSTRIES 2015

REV E

price®

Submittal Sheet

SPD-FR SQUARE PLAQUE DIFFUSER FIRE RATED ASSEMBLY

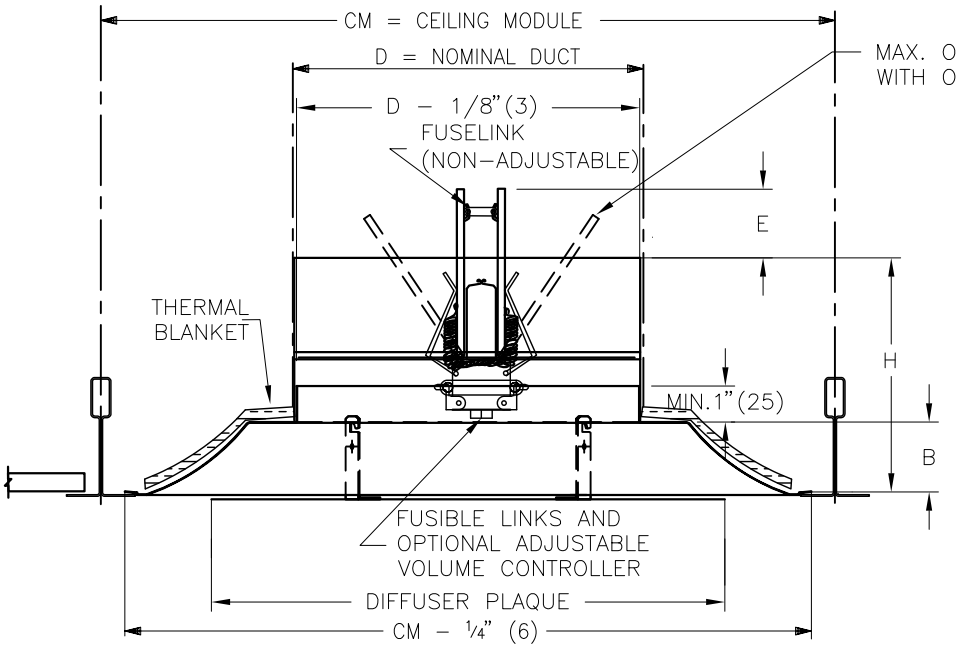

☐ **3P T-BAR PANEL**

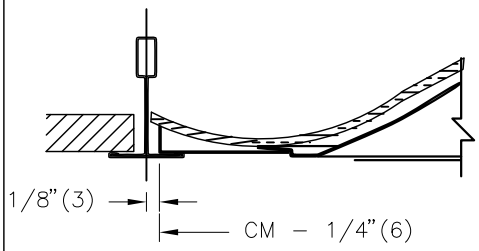

	DIFFUSER SIZE 12X12/300X300	CM=NOM. PANEL SIZE MODULES	
☐		24X12	600X300
☐		20X20 24X24	500x500 600x600

IMPERIAL UNITS (inches)

	CM	B	H	DUCT SIZE
☐	24x24 (610x610)	2½ (64)	6⁹⁄₁₆ (167)	6,8,10,12,14,15 (152,203,254,305,356,381)
☐	20X20 (508X508)	2½ (64)	6⁹⁄₁₆ (167)	6,8,10 (152,203,254)
☐	12x12 (305X305)	1⅛ (29)	5³⁄₁₆ (132)	5,6,7,8 (127,152,178,203)

SI UNITS (mm)

	CM	B	H	DUCT SIZE
☐	600x600	64	167	152,203,254,305,356,381
☐	500x500	64	167	152,203,254
☐	300x300	29	132	127,152,178,203

ROUND NECK	
NOM. DUCT	E
5 (127)	½ (13)
6 (152)	1 (25)
7 (178)	1½ (51)
8 (203)	2 (51)
10 (254)	3 (76)
12 (305)	4 (102)
14 (356)	5 (127)
15 (381)	5½ (140)

MATERIAL:

- STEEL CONSTRUCTION
- CEILING RADIATION DAMPER: GALVANIZED STEEL, BUTTERFLY TYPE
- THERMAL BLANKET: NON ASBESTOS

FINISH:

☐ B12 WHITE

(OPTIONAL FINISHES AVAILABLE)

OPTION:

☐ ADJUSTABLE VOLUME CONTROLLER (ALLEN KEY)

☐ 165°F (74°C) FUSIBLE LINK (STANDARD)

☐ 212°F (100°C) FUSE LINK

NOTE:

- FIRE RATED 3 HOUR.
- UL CLASSIFIED FIRE RATED CEILING DIFFUSER ASSEMBLY LISTED IN UNDERWRITERS LABORATORIES FIRE RESISTANCE DIRECTORY.
- ULC CLASSIFIED FIRE RATED CEILING DIFFUSER LISTED IN UNDERWRITERS OF CANADA LIST OF EQUIPMENT AND MATERIALS.
- DUCT: STEEL OR FLEX DUCT CONNECTIONS (BY OTHERS) AS PER FIRE RATED DESIGN REQUIREMENTS.
- INSTALLATION INSTRUCTIONS: 228791 OR FOR PANEL SEE SUBMITTAL 233667
- FIRE RATED DIFFUSERS ARE TO BE INSTALLED IN FIRE RATED T–BAR APPLICATIONS ONLY.

CLASSIFIED C UL US

ALL METRIC DIMENSIONS ( ) ARE SOFT CONVERTED. IMPERIAL DIMENSIONS ARE CONVERTED TO METRIC AND ROUNDED TO THE NEAREST MILLIMETER.

PROJECT:		price®	
ENGINEER:		MG	**SPD-FR** SQUARE PLAQUE DIFFUSER FIRE RATED ASSEMBLY
CUSTOMER:		228721	
SUBMITTAL DATE: 2021-02-08	**SPEC. SYMBOL:**	2015/03/31	

© Copyright PRICE INDUSTRIES 2015

REV F

price®

Submittal Sheet

PDN-FR PERFORATED DIFFUSER, FIRE RATED ASSEMBLY

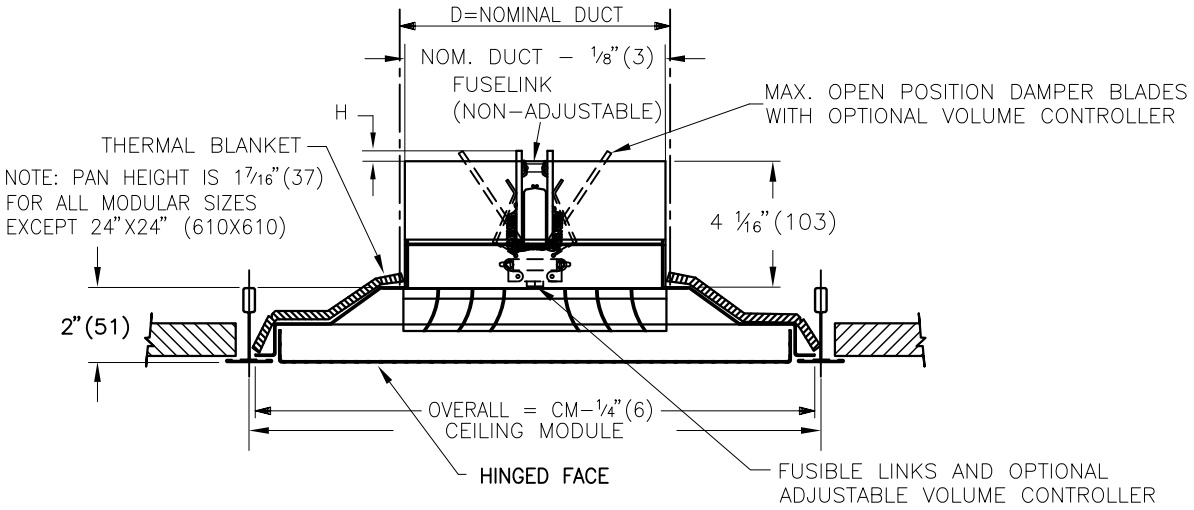

	CEILING MODULE (CM)	D SQUARE DUCT 6x6 (152x152)	8x8 (203x203)	10x10 (254x254)	12x12 (305x305)	14x14 (356x356)	15x15 (381x381)	D ROUND DUCT 6" (152)	8" (203)	10" (254)	12" (305)	14" (356)	15" (381)
IMPERIAL	12x12 (305x305)	•						•					
IMPERIAL	20x20 (508x508)	•	•	•				•	•	•			
IMPERIAL	24x24 (610x610)	•	•	•	•	•	•	•	•	•	•	•	•
METRIC	300x300	•						•					
METRIC	500x500	•	•	•				•	•	•			
METRIC	600x600	•	•	•	•	•	•	•	•	•	•	•	•

ROUND NECK NOM. DUCT	H
6 (152)	1 (25)
8 (203)	2 (51)
10 (254)	3 (76)
12 (305)	4 (102)
14 (356)	5 (127)
15 (381)	5½ (140)

SQUARE NECK NOM. DUCT	H
6 X 6 (152 X 152)	2 (51)
8 X 8 (203 X 203)	3 (76)
10 X 10 (254 X 254)	4 (102)
12 X 12 (305 X 305)	5 (127)
14 X 14 (356 X 356)	6 (152)
15 X 15 (381 X 381)	6½ (165)

MATERIAL:

- STEEL CONSTRUCTION
- CEILING RADIATION DAMPER: BUTTERFLY TYPE.
- THERMAL BLANKET: NON ASBESTOS

FINISH:

☐ B12 WHITE
(OPTIONAL FINISHES AVAILABLE)

OPTION:

☐ ADJUSTABLE VOLUME CONTROLLER (ALLEN KEY ADJUSTABLE)
☐ 165°F (74°C) FUSIBLE LINK (STANDARD)
☐ 212°F (100°C) FUSIBLE LINK

NOTE:

- FIRE RATED 3 HOUR.
- UL CLASSIFIED FIRE RATED CEILING DIFFUSER ASSEMBLY. LISTED IN UNDERWRITERS LABORATORIES FIRE RESISTANCE DIRECTORY.
- ULC CLASSIFIED FIRE RATED CEILING DIFFUSER ASSEMBLY. LISTED IN UNDERWRITERS OF CANADA LABORATORIES LIST OF EQUIPMENT AND MATERIALS.
- DEFLECTORS ARE FACTORY SUPPLIED IN A 4 WAY PATTERN SETTING.
- OTHER PATTERN SETTINGS CAN BE ACHIEVED BY ROTATING DEFLECTORS.
- DUCT: STEEL OR FLEXIBLE DUCT CONNECTIONS AS PER FIRE RATED DESIGN REQUIREMENTS.
- INSTALLATION INSTRUCTIONS: SEE SUBMITTAL 228791
- FIRE RATED DIFFUSERS ARE TO BE INSTALLED IN FIRE RATED T–BAR APPLICATIONS ONLY.

CLASSIFIED C UL US

ALL METRIC DIMENSIONS ( ) ARE SOFT CONVERTED. IMPERIAL DIMENSIONS ARE CONVERTED TO METRIC AND ROUNDED TO THE NEAREST MILLIMETER.

PROJECT:		price®
ENGINEER:		PDN-FR PERFORATED DIFFUSER WITH NECK DEFLECTORS FIRE RATED
CUSTOMER:		228722
SUBMITTAL DATE:	**SPEC. SYMBOL:**	2015/03/31

© Copyright PRICE INDUSTRIES 2015

REV C

price®

Submittal Sheet

PDNE-FR PERFORATED DIFFUSER, EXTENDED FACE, FIRE RATED ASSEMBLY

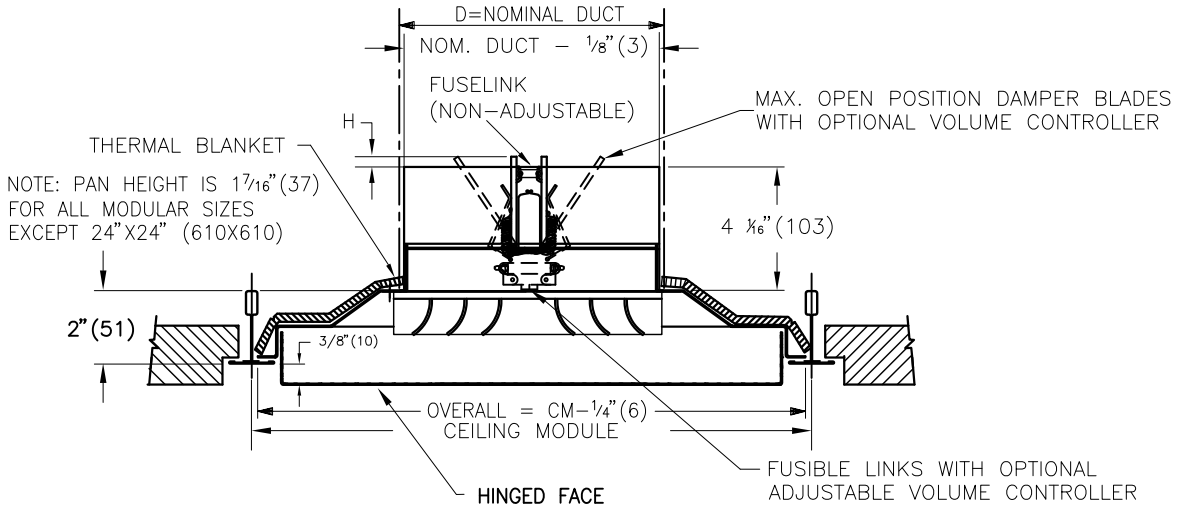

	CEILING MODULE (CM)	D SQUARE DUCT						D ROUND DUCT					
		6x6 (152x152)	8x8 (203x203)	10x10 (254x254)	12x12 (305x305)	14x14 (356x356)	15x15 (381x381)	6" (152)	8" (203)	10" (254)	12" (305)	14" (356)	15" (381)
IMPERIAL	12x12 (305x305)	•						•					
IMPERIAL	20x20 (508x508)	•	•	•				•	•	•			
IMPERIAL	24x24 (610x610)	•	•	•	•	•	•	•	•	•	•	•	•
METRIC	300x300	•						•					
METRIC	500x500	•	•	•				•	•	•			
METRIC	600x600	•	•	•	•	•	•	•	•	•	•	•	•

ROUND NECK	
NOM. DUCT	H
6 (152)	1 (25)
8 (203)	2 (51)
10 (254)	3 (76)
12 (305)	4 (102)
14 (356)	5 (127)
15 (381)	5½ (140)

SQUARE NECK	
NOM. DUCT	H
6 X 6 (152 X 152)	2 (51)
8 X 8 (203 X 203)	3 (76)
10 X 10 (254 X 254)	4 (102)
12 X 12 (305 X 305)	5 (127)
14 X 14 (356 X 356)	6 (152)
15 X 15 (381 X 381)	6½ (165)

MATERIAL:
- STEEL CONSTRUCTION
- CEILING RADIATION DAMPER: BUTTERFLY TYPE.
- THERMAL BLANKET: NON ASBESTOS

FINISH:
- ☐ B12 WHITE
(OPTIONAL FINISHES AVAILABLE)

OPTION:
- ☐ ADJUSTABLE VOLUME CONTROLLER (ALLEN KEY ADJUSTABLE)
- ☐ 165°F (74°C) FUSIBLE LINK (STANDARD)
- ☐ 212°F (100°C) FUSIBLE LINK

NOTE:
- FIRE RATED 3 HOUR.
- UL CLASSIFIED FIRE RATED CEILING DIFFUSER ASSEMBLY. LISTED IN UNDERWRITERS LABORATORIES FIRE RESISTANCE DIRECTORY.
- ULC CLASSIFIED FIRE RATED CEILING DIFFUSER ASSEMBLY. LISTED IN UNDERWRITERS OF CANADA LABORATORIES LIST OF EQUIPMENT AND MATERIALS.
- DEFLECTORS ARE FACTORY SUPPLIED IN A 4 WAY PATTERN SETTING.
- OTHER PATTERN SETTINGS CAN BE ACHIEVED BY ROTATING DEFLECTORS.
- DUCT: STEEL OR FLEXIBLE DUCT CONNECTIONS AS PER FIRE RATED DESIGN REQUIREMENTS.
- INSTALLATION INSTRUCTIONS: SEE SUBMITTAL 228791
- FIRE RATED DIFFUSERS ARE TO BE INSTALLED IN FIRE RATED T–BAR APPLICATIONS ONLY.

CLASSIFIED C UL US

ALL METRIC DIMENSIONS ( ) ARE SOFT CONVERTED. IMPERIAL DIMENSIONS ARE CONVERTED TO METRIC AND ROUNDED TO THE NEAREST MILLIMETER.

PROJECT:		price®	
ENGINEER:		MG	**PDNE-FR** EXTENDED FACE PERFORATED DIFFUSER WITH NECK DEFLECTORS FIRE RATED
CUSTOMER:		228723	
SUBMITTAL DATE:	**SPEC. SYMBOL:**	2015/03/31	

© Copyright PRICE INDUSTRIES 2015

REV C

price®

Submittal Sheet

PDF-FR PERFORATED DIFFUSER, FACE DEFLECTORS, FIRE RATED ASSEMBLY

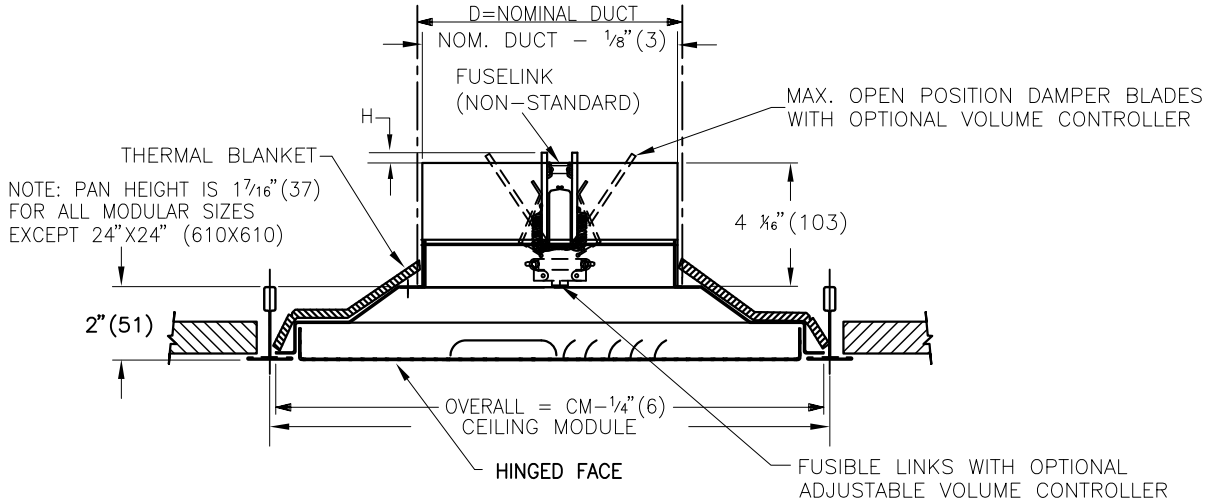

		D SQUARE DUCT					D ROUND DUCT					
CEILING MODULE (CM)		6x6 (152x152)	8x8 (203x203)	10x10 (254x254)	12x12 (305x305)	14x14 (356x356)	6" (152)	8" (203)	10" (254)	12" (305)	14" (356)	15" (381)
IMPERIAL	12x12 (305x305)	•					•					
IMPERIAL	20x20 (508x508)	•	•	•			•	•	•			
IMPERIAL	24x24 (610x610)	•	•	•	•	•	•	•	•	•	•	•
METRIC	300x300	•					•					
METRIC	500x500	•	•	•			•	•	•			
METRIC	600x600	•	•	•	•	•	•	•	•	•	•	•

ROUND NECK	
NOM. DUCT	H
6 (152)	1 (25)
8 (203)	2 (51)
10 (254)	3 (76)
12 (305)	4 (102)
14 (356)	5 (127)
15 (381)	5½ (140)

SQUARE NECK	
NOM. DUCT	H
6 X 6 (152 X 152)	2 (51)
8 X 8 (203 X 203)	3 (76)
10 X 10 (254 X 254)	4 (102)
12 X 12 (305 X 305)	5 (127)
14 X 14 (356 X 356)	6 (152)

MATERIAL:

- STEEL CONSTRUCTION
- CEILING RADIATION DAMPER: BUTTERFLY TYPE.
- THERMAL BLANKET: NON ASBESTOS

FINISH:

☐ B12 WHITE
(OPTIONAL FINISHES AVAILABLE)

OPTION:

☐ ADJUSTABLE VOLUME CONTROLLER (ALLEN KEY ADJUSTABLE)
☐ 165°F (74°C) FUSIBLE LINK (STANDARD)
☐ 212°F (100°C) FUSIBLE LINK

NOTE:

- FIRE RATED 3 HOUR.
- UL CLASSIFIED FIRE RATED CEILING DIFFUSER ASSEMBLY. LISTED IN UNDERWRITERS LABORATORIES FIRE RESISTANCE DIRECTORY.
- ULC CLASSIFIED FIRE RATED CEILING DIFFUSER ASSEMBLY. LISTED IN UNDERWRITERS OF CANADA LABORATORIES LIST OF EQUIPMENT AND MATERIALS.
- DEFLECTORS ARE FACTORY SUPPLIED IN A 4 WAY PATTERN SETTING.
- OTHER PATTERN SETTINGS CAN BE ACHIEVED BY ROTATING DEFLECTORS.
- DUCT: STEEL OR FLEXIBLE DUCT CONNECTIONS AS PER FIRE RATED DESIGN REQUIRMENTS.
- INSTALLATION INSTRUCTIONS: SEE SUBMITTAL 228791
- FIRE RATED DIFFUSERS ARE TO BE INSTALLED IN FIRE RATED T–BAR APPLICATIONS ONLY.

CLASSIFIED C UL US

ALL METRIC DIMENSIONS ( ) ARE SOFT CONVERTED. IMPERIAL DIMENSIONS ARE CONVERTED TO METRIC AND ROUNDED TO THE NEAREST MILLIMETER.

PROJECT:		price®	
ENGINEER:		MJ	**PDF-FR** PERFORATED DIFFUSER WITH FACE DEFLECTORS FIRE RATED
CUSTOMER:		228724	
SUBMITTAL DATE:	**SPEC. SYMBOL:**	2015/03/31	

© Copyright PRICE INDUSTRIES 2015

REV C

price®

Submittal Sheet

PDFE-FR PERFORATED DIFFUSER, EXTENDED FACE, FIRE RATED ASSEMBLY

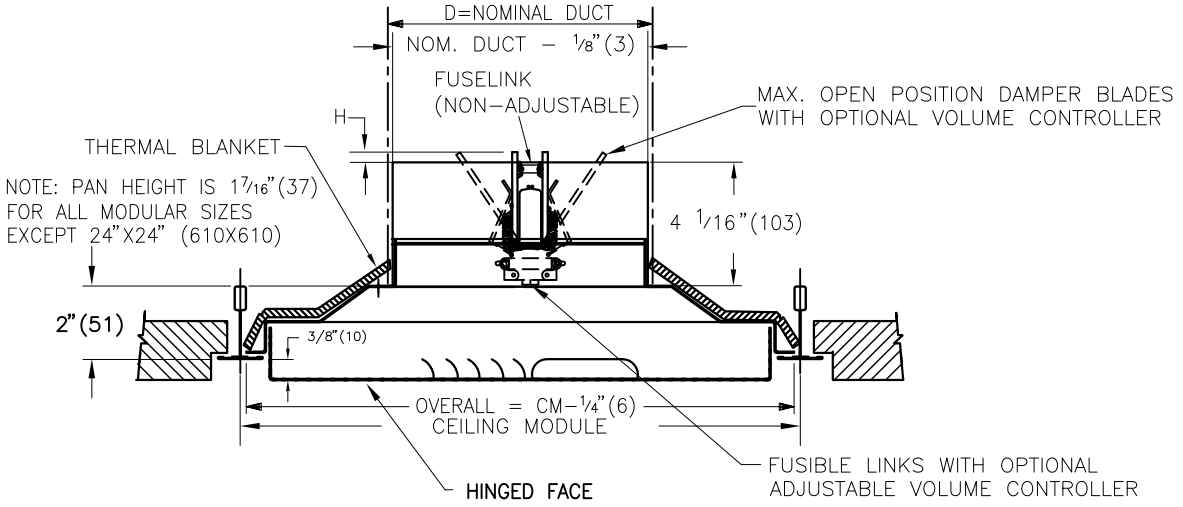

	CEILING MODULE (CM)	D SQUARE DUCT 6x6 (152x152)	8x8 (203x203)	10x10 (254x254)	12x12 (305x305)	(14X14) (356x356)	D ROUND DUCT 6" (152)	8" (203)	10" (254)	12" (305)	14" (356)	15" (381)
IMPERIAL	12x12 (305x305)	•					•					
IMPERIAL	20x20 (508x508)	•	•	•			•	•	•			
IMPERIAL	24x24 (610x610)	•	•	•	•	•	•	•	•	•	•	•
METRIC	300x300	•					•					
METRIC	500x500	•	•	•			•	•	•			
METRIC	600x600	•	•	•	•	•	•	•	•	•	•	•

ROUND NECK NOM. DUCT	H
6 (152)	1 (25)
8 (203)	2 (51)
10 (254)	3 (76)
12 (305)	4 (102)
14 (356)	5 (127)
15 (381)	5½ (140)

SQUARE NECK NOM. DUCT	H
6 X 6 (152 X 152)	2 (51)
8 X 8 (203 X 203)	3 (76)
10 X 10 (254 X 254)	4 (102)
12 X 12 (305 X 305)	5 (127)
14 X 14 (356 X 356)	6 (152)

MATERIAL:

- STEEL CONSTRUCTION
- CEILING RADIATION DAMPER: BUTTERFLY TYPE.
- THERMAL BLANKET: NON ASBESTOS

FINISH:

☐ B12 WHITE
(OPTIONAL FINISHES AVAILABLE)

OPTION:

☐ ADJUSTABLE VOLUME CONTROLLER (ALLEN KEY ADJUSTABLE)
☐ 165°F (74°C) FUSIBLE LINK (STANDARD)
☐ 212°F (100°C) FUSIBLE LINK

NOTE:

- FIRE RATED 3 HOUR.
- UL CLASSIFIED FIRE RATED CEILING DIFFUSER ASSEMBLY. LISTED IN UNDERWRITERS LABORATORIES FIRE RESISTANCE DIRECTORY.
- ULC CLASSIFIED FIRE RATED CEILING DIFFUSER ASSEMBLY. LISTED IN UNDERWRITERS OF CANADA LABORATORIES LIST OF EQUIPMENT AND MATERIALS.
- DEFLECTORS ARE FACTORY SUPPLIED IN A 4 WAY PATTERN SETTING.
- OTHER PATTERN SETTINGS CAN BE ACHIEVED BY ROTATING DEFLECTORS.
- DUCT: STEEL OR FLEXIBLE DUCT CONNECTIONS AS PER FIRE RATED DESIGN REQUIREMENTS.
- INSTALLATION INSTRUCTIONS: SEE SUBMITTAL 228791
- FIRE RATED DIFFUSERS ARE TO BE INSTALLED IN FIRE RATED T–BAR APPLICATIONS ONLY.

CLASSIFIED C UL US

ALL METRIC DIMENSIONS ( ) ARE SOFT CONVERTED. IMPERIAL DIMENSIONS ARE CONVERTED TO METRIC AND ROUNDED TO THE NEAREST MILLIMETER.

PROJECT:		price®
ENGINEER:		MJ
CUSTOMER:		228725
SUBMITTAL DATE:	**SPEC. SYMBOL:**	2015/03/31

PDFE-FR
EXTENDED FACE
PERFORATED DIFFUSER
WITH FACE DEFLECTORS
FIRE RATED

© Copyright PRICE INDUSTRIES 2015

REV C

price®

Submittal Sheet

PDC-FR, PERFORATED DIFFUSER, FIRE RATED ASSEMBLY

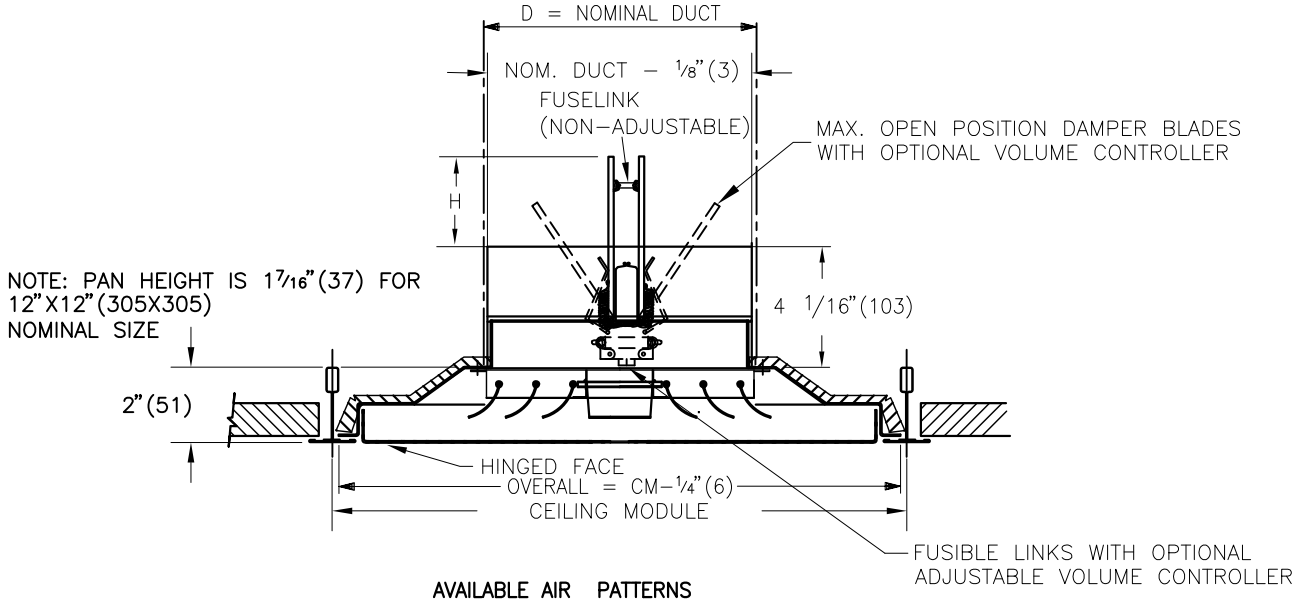

AVAILABLE AIR PATTERNS

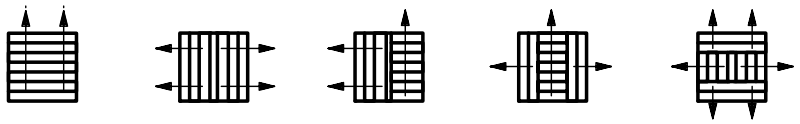

1–WAY 2–WAY 2–WAY CORNER 3–WAY 4–WAY

CEILING MODULE	ROUND DUCT SIZE	SQUARE DUCT SIZE
12x12 (305x305)	6 (152)	6x6 (152x152)
24x24 (610xX610)	6,8,10,12,14,15 (152,203,254,305,356,381)	6x6,8x8,10x10,12x12,14x14,15x15, 16x16,18x18 (152x152,203x203,254x254,305x305 356x356,381x381,406x406,457x457)

ROUND NECK	
NOM. DUCT	H
6 (152)	1 (25)
8 (203)	2 (51)
10 (254)	3 (76)
12 (305)	4 (102)
14 (356)	5 (127)
15 (381)	5½ (140)

SQUARE NECK	
NOM. DUCT	H
6 X 6 (152 X 152)	2 (51)
8 X 8 (203 X 203)	3 (76)
10 X 10 (254 X 254)	4 (102)
12 X 12 (305 X 305)	5 (127)
14 X 14 (356 X 356)	6 (152)
15 X 15 (381 X 381)	6½ (165)
16 X 16 (406 X 406)	7 (179)
18 X 18 (457 X 457)	8 (203)

MATERIAL:
- STEEL CONSTRUCTION
- CEILING RADIATION DAMPER: BUTTERFLY TYPE.
- THERMAL BLANKET: NON ASBESTOS

FINISH:
- ☐ B12 WHITE
(OPTIONAL FINISHES AVAILABLE)

OPTION:
- ☐ ADJUSTABLE VOLUME CONTROLLER (ALLEN KEY ADJUSTABLE)
- ☐ 162°F (74°C) FUSIBLE LINK (STANDARD)
- ☐ 212°F (100°C) FUSIBLE LINK

NOTE:
- FIRE RATED 3 HOUR.
- UL CLASSIFIED FIRE RATED CEILING DIFFUSER ASSEMBLY. LISTED IN UNDERWRITERS LABORATORIES FIRE RESISTANCE DIRECTORY.
- ULC CLASSIFIED FIRE RATED CEILING DIFFUSER ASSEMBLY. LISTED IN UNDERWRITERS OF CANADA LABORATORIES LIST OF EQUIPMENT AND MATERIALS.
- 1, 2, 2C, 3 & 4–WAY AIR PATTERNS HAVE INDIVIDUALLY ADJUSTABLE BLADES.
- CURVED BLADES ARE LOCATED AT THE INLET NECK AND ARE FIELD ADJUSTABLE FROM HORIZONTAL TO VERTICAL AIR PATTERN.
- DUCT: STEEL OR FLEXIBLE DUCT CONNECTIONS AS PER FIRE RATED DESIGN REQUIREMENTS.
- INSTALLATION INSTRUCTIONS: SEE SUBMITTAL 228791
- FIRE RATED DIFFUSERS ARE TO BE INSTALLED IN FIRE RATED T–BAR APPLICATIONS ONLY.

CLASSIFIED C UL US

ALL METRIC DIMENSIONS ( ) ARE SOFT CONVERTED. IMPERIAL DIMENSIONS ARE CONVERTED TO METRIC AND ROUNDED TO THE NEAREST MILLIMETER.

PROJECT:		price®	
ENGINEER:		MJ	**PDC-FR** PERFORATED DIFFUSER C/W ADJUSTABLE CURVED BLADES FIRE RATED
CUSTOMER:		228726	
SUBMITTAL DATE:	**SPEC. SYMBOL:**	2015/03/31	

© Copyright PRICE INDUSTRIES 2015

REV C

price®

Submittal Sheet

PDCE-FR, PERFORATED DIFFUSER, FIRE RATED ASSEMBLY

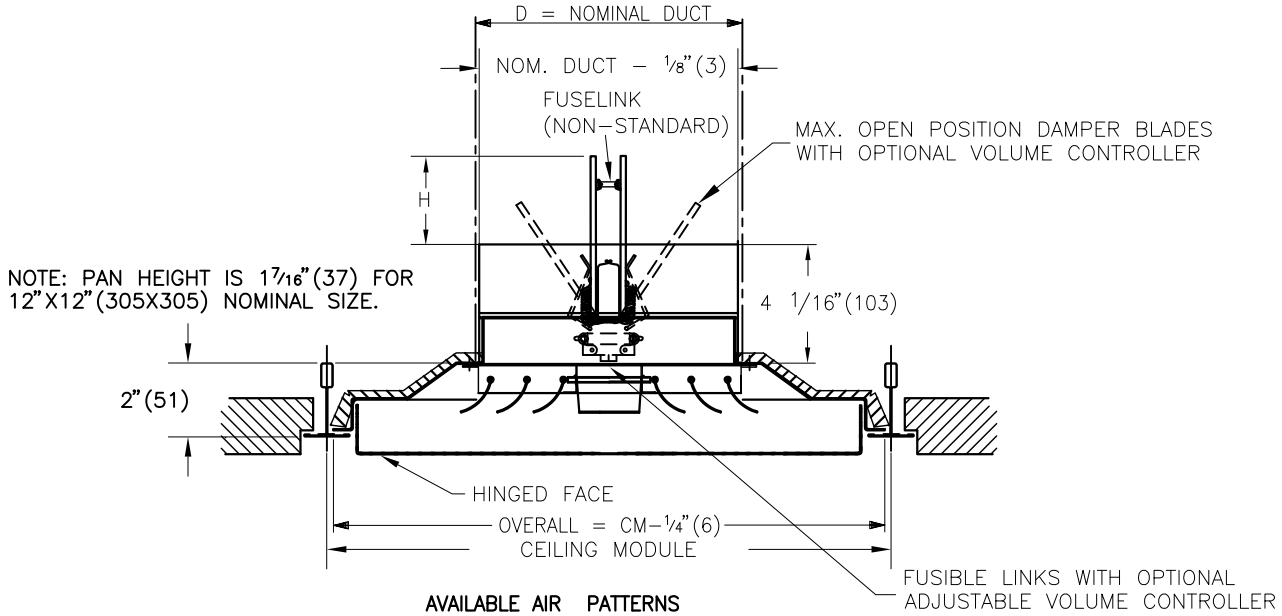

AVAILABLE AIR PATTERNS

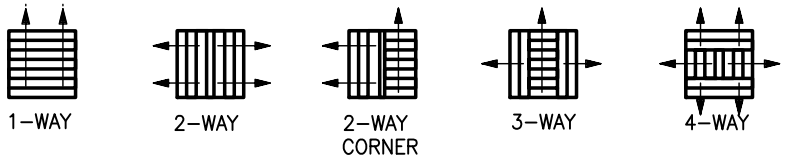

CEILING MODULE	ROUND DUCT SIZE	SQUARE DUCT SIZE
12x12 (305x305)	6 (152)	6x6 (152x152)
24x24 (610xX610)	6,8,10,12,14,15 (152,203,254,305,356,381)	6x6,8x8,10x10,12x12,14x14,15x15, 16x16,18x18 (152x152,203x203,254x254,305x305 356x356,381x381,406x406,457x457)

ROUND NECK	
NOM. DUCT	H
6 (152)	1 (25)
8 (203)	2 (51)
10 (254)	3 (76)
12 (305)	4 (102)
14 (356)	5 (127)
15 (381)	5½ (140)

SQUARE NECK	
NOM. DUCT	H
6 X 6 (152 X 152)	2 (51)
8 X 8 (203 X 203)	3 (76)
10 X 10 (254 X 254)	4 (102)
12 X 12 (305 X 305)	5 (127)
14 X 14 (356 X 356)	6 (152)
15 X 15 (381 X 381)	6½ (165)
16 X 16 (406 X 406)	7 (179)
18 X 18 (457 X 457)	8 (203)

MATERIAL:
- STEEL CONSTRUCTION
- CEILING RADIATION DAMPER: BUTTERFLY TYPE.
- THERMAL BLANKET: NON ASBESTOS

FINISH:
- ☐ B12 WHITE

(OPTIONAL FINISHES AVAILABLE)

OPTION:
- ☐ ADJUSTABLE VOLUME CONTROLLER (ALLEN KEY ADJUSTABLE)
- ☐ 165°F (74°C) FUSIBLE LINK (STANDARD)
- ☐ 212°F (100°C) FUSIBLE LINK

NOTE:
- FIRE RATED 3 HOUR.
- UL CLASSIFIED FIRE RATED CEILING DIFFUSER ASSEMBLY. LISTED IN UNDERWRITERS LABORATORIES FIRE RESISTANCE DIRECTORY.
- ULC CLASSIFIED FIRE RATED CEILING DIFFUSER ASSEMBLY. LISTED IN UNDERWRITERS OF CANADA LABORATORIES LIST OF EQUIPMENT AND MATERIALS.
- 1, 2, 2C, 3 & 4–WAY AIR PATTERNS HAVE INDIVIDUALLY ADJUSTABLE BLADES.
- CURVED BLADES ARE LOCATED AT THE INLET NECK AND ARE FIELD ADJUSTABLE FROM HORIZONTAL TO VERTICAL AIR PATTERN.
- DUCT: STEEL OR FLEXIBLE DUCT CONNECTIONS AS PER FIRE RATED DESIGN REQUIREMENTS.
- INSTALLATION INSTRUCTIONS: SEE SUBMITTAL 228791
- FIRE RATED DIFFUSERS ARE TO BE INSTALLED IN FIRE RATED T–BAR APPLICATIONS ONLY.

CLASSIFIED C UL US

ALL METRIC DIMENSIONS ( ) ARE SOFT CONVERTED. IMPERIAL DIMENSIONS ARE CONVERTED TO METRIC AND ROUNDED TO THE NEAREST MILLIMETER.

PROJECT:		price®	
ENGINEER:		MJ	**PDCE-FR** PERFORATED DIFFUSER ADJUSTABLE CURVED BLADES EXTENDED FACE FIRE RATED
CUSTOMER:		228727	
SUBMITTAL DATE:	**SPEC. SYMBOL:**	2015/03/31	

© Copyright PRICE INDUSTRIES 2015

REV C

price®

Submittal Sheet

PDDR-FR PERFORATED DIFFUSER, DUCTED RETURN, FIRE RATED ASSEMBLY

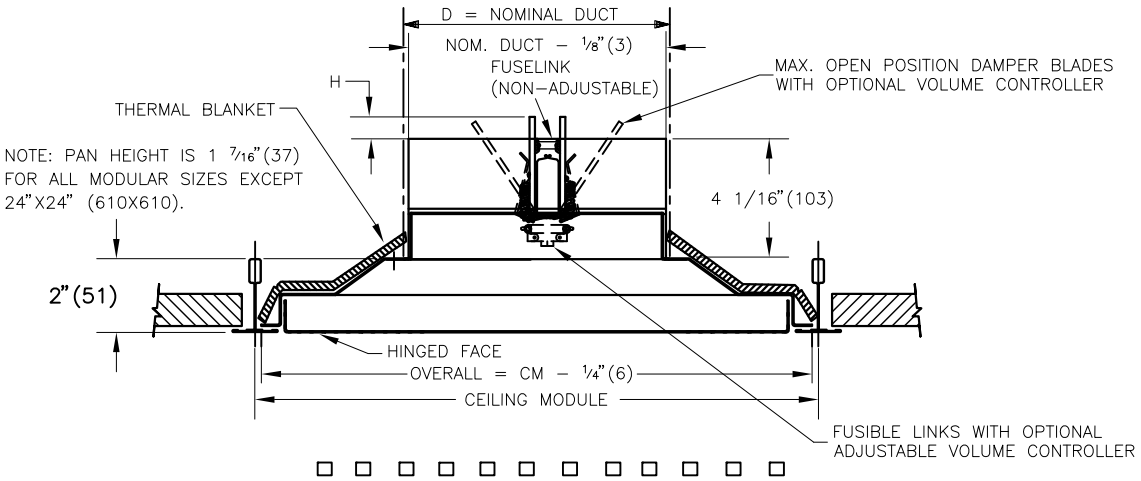

	CEILING MODULE (CM)	D SQUARE DUCT 6x6 (152x152)	8x8 (203x203)	10x10 (254x254)	12x12 (305x305)	14x14 (356x356)	15x15 (381x381)	D ROUND DUCT 6" (152)	8" (203)	10" (254)	12" (305)	14" (356)	15" (381)
IMPERIAL	12x12 (305x305)	•						•					
IMPERIAL	20x20 (505x508)	•	•	•				•	•	•			
IMPERIAL	24x24 (610x610)	•	•	•	•	•	•	•	•	•	•	•	•
METRIC	300x300	•						•					
METRIC	500x500	•	•	•				•	•	•			
METRIC	600x600	•	•	•	•	•	•	•	•	•	•	•	•

ROUND NECK	
NOM. DUCT	H
6 (152)	1 (25)
8 (203)	2 (51)
10 (254)	3 (76)
12 (305)	4 (102)
14 (356)	5 (127)
15 (381)	5½ (140)

SQUARE NECK	
NOM. DUCT	H
6 X 6 (152 X 152)	2 (51)
8 X 8 (203 X 203)	3 (76)
10 X 10 (254 X 254)	4 (102)
12 X 12 (305 X 305)	5 (127)
14 X 14 (356 X 356)	6 (152)
15 X 15 (381 X 381)	6½ (165)

MATERIAL:
- STEEL CONSTRUCTION
- CEILING RADIATION DAMPER: BUTTERFLY TYPE.
- THERMAL BLANKET: NON ASBESTOS

FINISH:
- ☐ B12 WHITE (OPTIONAL FINISHES AVAILABLE)

OPTION:
- ☐ ADJUSTABLE VOLUME CONTROLLER (ALLEN KEY ADJUSTABLE)
- ☐ 165°F (74°C) FUSIBLE LINK (STANDARD)
- ☐ 212°F (100°C) FUSIBLE LINK

NOTE:
- FIRE RATED 3 HOUR.
- UL CLASSIFIED FIRE RATED CEILING DIFFUSER ASSEMBLY. LISTED IN UNDERWRITERS LABORATORIES FIRE RESISTANCE DIRECTORY.
- ULC CLASSIFIED FIRE RATED CEILING DIFFUSER ASSEMBLY. LISTED IN UNDERWRITERS OF CANADA LABORATORIES LIST OF EQUIPMENT AND MATERIALS.
- DUCT: STEEL OR FLEXIBLE DUCT CONNECTIONS. AS PER FIRE RATED DESIGN REQUIREMENTS.
- INSTALLATION INSTRUCTIONS: SEE SUBMITTAL 228791
- FIRE RATED DIFFUSERS ARE TO BE INSTALLED IN FIRE RATED T–BAR APPLICATIONS ONLY.

CLASSIFIED c UL US

ALL METRIC DIMENSIONS ( ) ARE SOFT CONVERTED. IMPERIAL DIMENSIONS ARE CONVERTED TO METRIC AND ROUNDED TO THE NEAREST MILLIMETER.

PROJECT:		price®
ENGINEER:		MJ
CUSTOMER:		228728
SUBMITTAL DATE:	**SPEC. SYMBOL:**	2015/03/31

PDDR-FR
PERFORATED DIFFUSER
DUCTED RETURN
FIRE RATED

© Copyright PRICE INDUSTRIES 2015

REV C

price®

Submittal Sheet

PDDRE-FR PERFORATED DIFFUSER, DUCTED RETURN, FIRE RATED ASSEMBLY

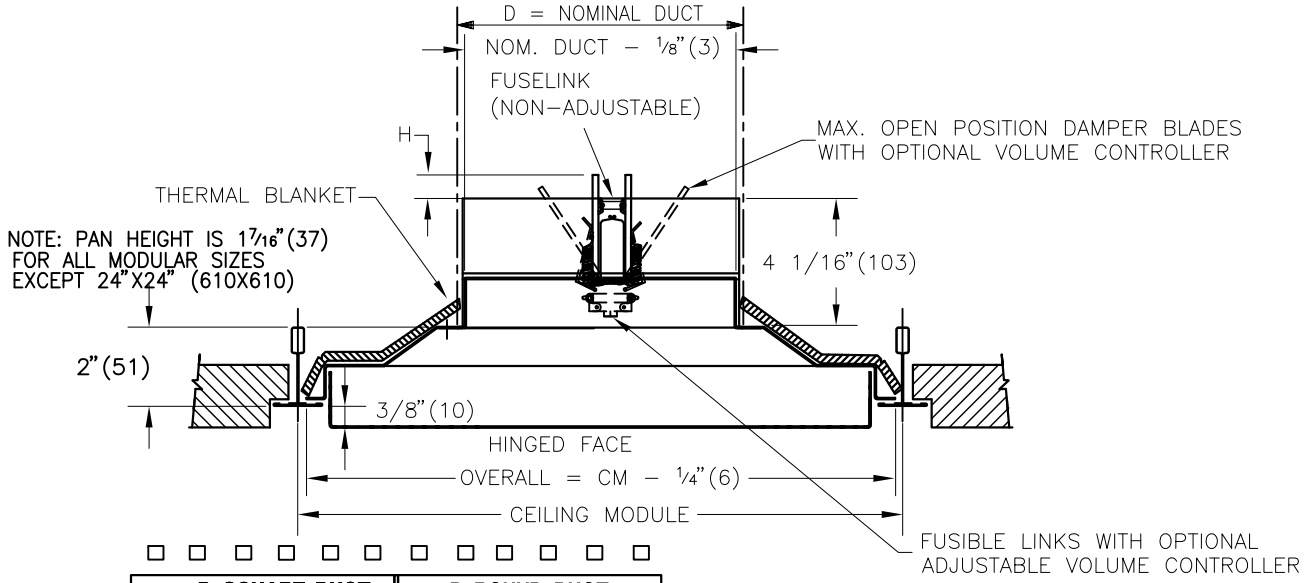

		CEILING MODULE (CM)	D SQUARE DUCT 6x6 (152x152)	8x8 (203x203)	10x10 (254x254)	12x12 (305x305)	14x14 (356x356)	15x15 (381x381)	D ROUND DUCT 6" (152)	8" (203)	10" (254)	12" (305)	14" (356)	15" (381)
☐	IMPERIAL	12x12 (305x305)	•						•					
☐	IMPERIAL	20x20 (505x508)	•	•	•				•	•	•			
☐	IMPERIAL	24x24 (610x610)	•	•	•	•	•	•	•	•	•	•	•	•
☐	METRIC	300x300	•						•					
☐	METRIC	500x500	•	•	•				•	•	•			
☐	METRIC	600x600	•	•	•	•	•	•	•	•	•	•	•	•

ROUND NECK	
NOM. DUCT	H
6 (152)	1 (25)
8 (203)	2 (51)
10 (254)	3 (76)
12 (305)	4 (102)
14 (356)	5 (127)
15 (381)	5½ (140)

SQUARE NECK	
NOM. DUCT	H
6 X 6 (152 X 152)	2 (51)
8 X 8 (203 X 203)	3 (76)
10 X 10 (254 X 254)	4 (102)
12 X 12 (305 X 305)	5 (127)
14 X 14 (356 X 356)	6 (152)
15 X 15 (381 X 381)	6½ (165)

MATERIAL:
- STEEL CONSTRUCTION
- CEILING RADIATION DAMPER: BUTTERFLY TYPE.
- THERMAL BLANKET: NON ASBESTOS

FINISH:
☐ B12 WHITE
(OPTIONAL FINISHES AVAILABLE)

OPTION:
☐ ADJUSTABLE VOLUME CONTROLLER (ALLEN KEY ADJUSTABLE)
☐ 165°F (74°C) FUSIBLE LINK (STANDARD)
☐ 212°F (100°C) FUSIBLE LINK

NOTE:
- FIRE RATED 3 HOUR.
- UL CLASSIFIED FIRE RATED CEILING DIFFUSER ASSEMBLY. LISTED IN UNDERWRITERS LABORATORIES FIRE RESISTANCE DIRECTORY.
- ULC CLASSIFIED FIRE RATED CEILING DIFFUSER ASSEMBLY. LISTED IN UNDERWRITERS OF CANADA LABORATORIES LIST OF EQUIPMENT AND MATERIALS.
- DUCT: STEEL OR FLEXIBLE DUCT CONNECTIONS AS PER FIRE RATED DESIGN REQUIREMENTS.
- INSTALLATION INSTRUCTIONS: SEE SUBMITTAL 228791
- FIRE RATED DIFFUSERS ARE TO BE INSTALLED IN FIRE RATED T–BAR APPLICATIONS ONLY.

CLASSIFIED C UL US

ALL METRIC DIMENSIONS ( ) ARE SOFT CONVERTED. IMPERIAL DIMENSIONS ARE CONVERTED TO METRIC AND ROUNDED TO THE NEAREST MILLIMETER.

PROJECT:		price®	
ENGINEER:		MG	**PDDRE-FR** PERFORATED DIFFUSER DUCTED RETURN EXTENDED FACE FIRE RATED
CUSTOMER:		228729	
SUBMITTAL DATE:	**SPEC. SYMBOL:**	2015/03/31	

© Copyright PRICE INDUSTRIES 2015

REV C

price®

Submittal Sheet

PDDR-FR PLENUM RETURN PERFORATED FIRE RATED DIFFUSER ASSEMBLY

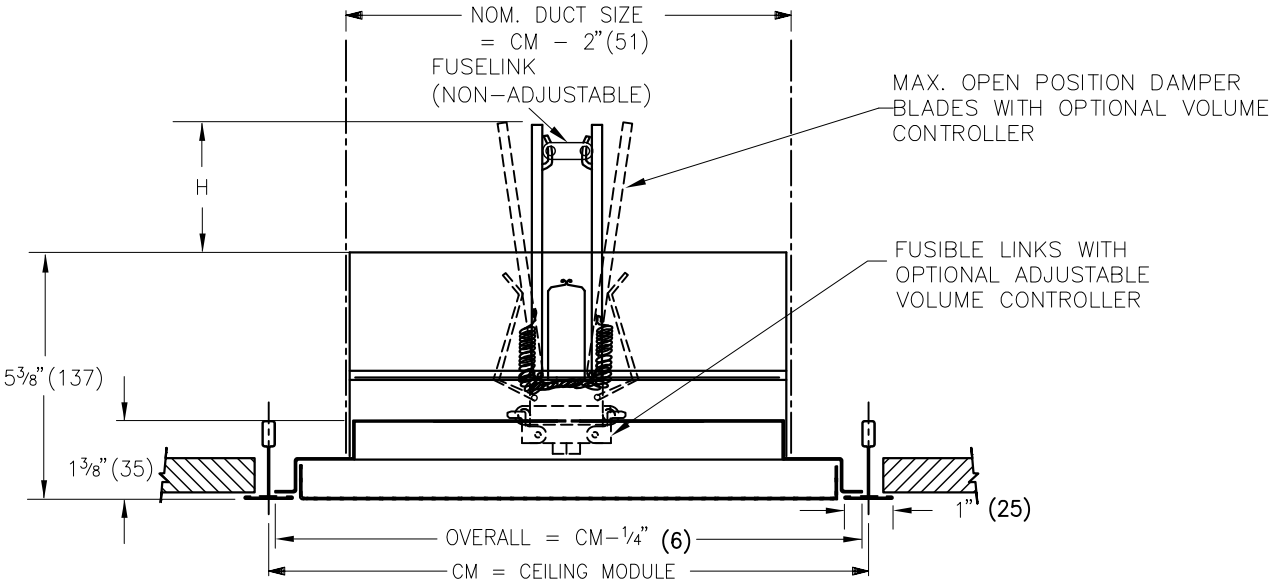

		CEILING MODULE (CM)	NOM. DUCT SIZE (SQUARE)
☐	IMPERIAL	12x12 (305x305)	10x10 (245x245)
☐	IMPERIAL	24x12 (610x305)	22x10 (559x254)
☐	IMPERIAL	16x16 (406x406)	14x14 (356x356)
☐	IMPERIAL	20x20 (508x508)	18x18 (547x547)
☐	IMPERIAL	24x24 (610x610)	22x22 (559x559)
☐	METRIC	300 x 300	249x249
☐	METRIC	600 x 300	549x549
☐	METRIC	400 x 400	349x349
☐	METRIC	500 x 500	449x449
☐	METRIC	600 x 600	549x549

SQUARE NECK	
NOM. DUCT	H
10 X 10 (254 X 254)	4 (102)
14 X 14 (356 X 356)	6 (152)
18 X 18 (547 X 547)	8 (203)
22 X 10 (559 X 254)	4 (102)
22 X 22 (559 X 559)	10 (254)

NOTE:

- FIRE RATED 3 HOUR.
- UL CLASSIFIED FIRE RATED CEILING DIFFUSER ASSEMBLY. LISTED IN UNDERWRITERS LABORATORIES FIRE RESISTANCE DIRECTORY.
- ULC CLASSIFIED FIRE RATED CEILING DIFFUSER ASSEMBLY. LISTED IN UNDERWRITERS OF CANADA LABORATORIES LIST OF EQUIPMENT AND MATERIALS.
- DUCT: STEEL OR FLEXIBLE DUCT CONNECTIONS AS PER FIRE RATED DESIGN REQUIREMENTS.
- INSTALLATION INSTRUCTIONS: SEE SUBMITTAL 228791
- FIRE RATED DIFFUSERS ARE TO BE INSTALLED IN FIRE RATED T–BAR APPLICATIONS ONLY.

FINISH:

☐ B12 WHITE
(OPTIONAL FINISHES AVAILABLE)

MATERIAL:

☐ PDDR – STEEL CONSTRUCTION

OPTIONS:

☐ ADJUSTABLE VOLUME CONTROLLER (ALLEN KEY ADJUSTABLE)
☐ 165°F (74°C) FUSIBLE LINK (STANDARD)
☐ 212°F (100°C) FUSIBLE LINK

CLASSIFIED C UL US

ALL METRIC DIMENSIONS ( ) ARE SOFT CONVERTED. IMPERIAL DIMENSIONS ARE CONVERTED TO METRIC AND ROUNDED TO THE NEAREST MILLIMETER.

PROJECT:		price®	
ENGINEER:		MJ	**PDDR-FR** PLENUM RETURN PERF. FACE DIFFUSER MAXIMUM SQUARE NECK
CUSTOMER:		230757	
SUBMITTAL DATE:	**SPEC. SYMBOL:**	2015/03/31	

© Copyright PRICE INDUSTRIES 2015

REV B

price®

Submittal Sheet

PDDRE-FR PLENUM RETURN PERFORATED EXTENDED FACE FIRE RATED DIFFUSER ASSEMBLY

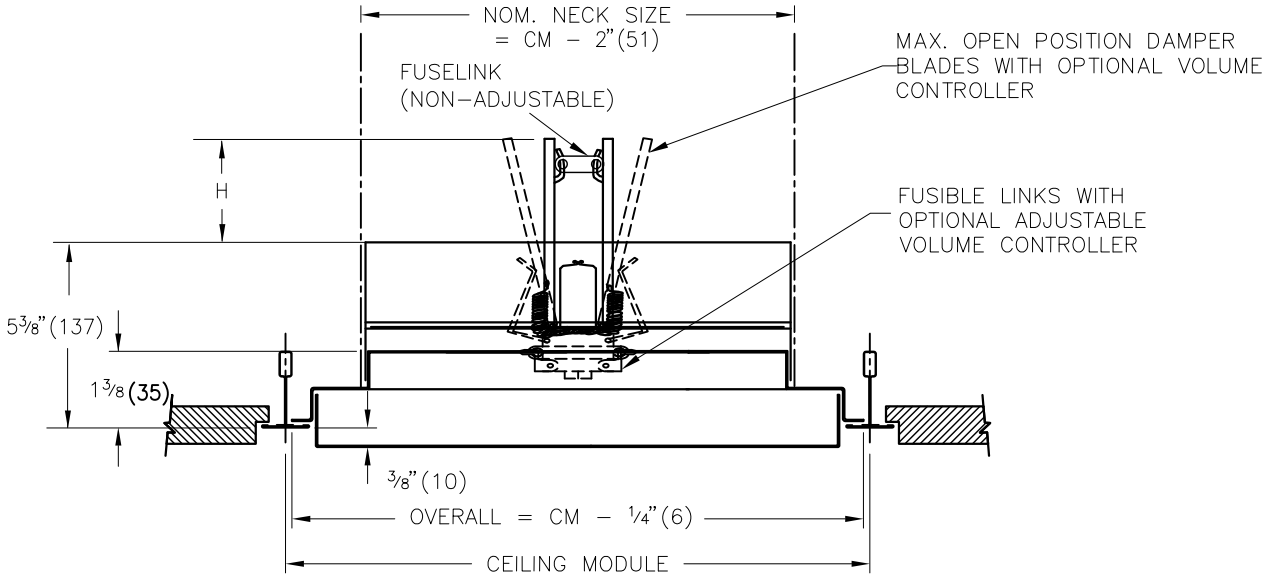

		CEILING MODULE (CM)	NECK SIZE (SQUARE)
☐	IMPERIAL	12x12 (305x305)	10x10 (254x254)
☐	IMPERIAL	24x12 (610x305)	22x10 (559x254)
☐	IMPERIAL	16x16 (406x406)	14x14 (356x356)
☐	IMPERIAL	20x20 (508x508)	18x18 (457x457)
☐	IMPERIAL	24x24 (610x610)	22x22 (559x559)
☐	METRIC	300 x 300	249x249
☐	METRIC	600 x 300	549x549
☐	METRIC	400 x 400	349x349
☐	METRIC	500 x 500	449x449
☐	METRIC	600 x 600	549x549

SQUARE NECK	
NOM. DUCT	H
10 X 10 (254 X 254)	4 (102)
14 X 14 (356 X 356)	6 (152)
18 X 18 (547 X 547)	8 (203)
22 X 10 (559 X 254)	4 (102)
22 X 22 (559 X 559)	10 (254)

FINISH:
- ☐ B12 WHITE
(OPTIONAL FINISHES AVAILABLE)

MATERIAL:
- ☐ PDDRE – STEEL CONSTRUCTION

OPTIONS:
- ☐ ADJUSTABLE VOLUME CONTROLLER (ALLEN KEY ADJUSTABLE)
- ☐ 165°F (74°C) FUSIBLE LINK (STANDARD)
- ☐ 212°F (100°C) FUSIBLE LINK

NOTE:
- FIRE RATED 3 HOUR.
- UL CLASSIFIED FIRE RATED CEILING DIFFUSER ASSEMBLY. LISTED IN UNDERWRITERS LABORATORIES FIRE RESISTANCE DIRECTORY.
- ULC CLASSIFIED FIRE RATED CEILING DIFFUSER ASSEMBLY. LISTED IN UNDERWRITERS OF CANADA LABORATORIES LIST OF EQUIPMENT AND MATERIALS.
- DUCT: STEEL OR FLEXIBLE DUCT CONNECTIONS AS PER FIRE RATED DESIGN REQUIREMENTS.
- INSTALLATION INSTRUCTIONS: SEE SUBMITTAL 228791
- FIRE RATED DIFFUSERS ARE TO BE INSTALLED IN FIRE RATED T–BAR APPLICATIONS ONLY.

CLASSIFIED C UL US

ALL METRIC DIMENSIONS ( ) ARE SOFT CONVERTED. IMPERIAL DIMENSIONS ARE CONVERTED TO METRIC AND ROUNDED TO THE NEAREST MILLIMETER.

PROJECT:		price®	
ENGINEER:		MJ	**PDDRE-FR** PLENUM RETURN EXTENDED PERF. FACE MAXIMUM SQUARE NECK
CUSTOMER:		230758	
SUBMITTAL DATE:	**SPEC. SYMBOL:**	2015/03/31	

© Copyright PRICE INDUSTRIES 2015

REV B

price®

Submittal Sheet

SMD-FR MODULAR FIRE RATED DIFFUSER

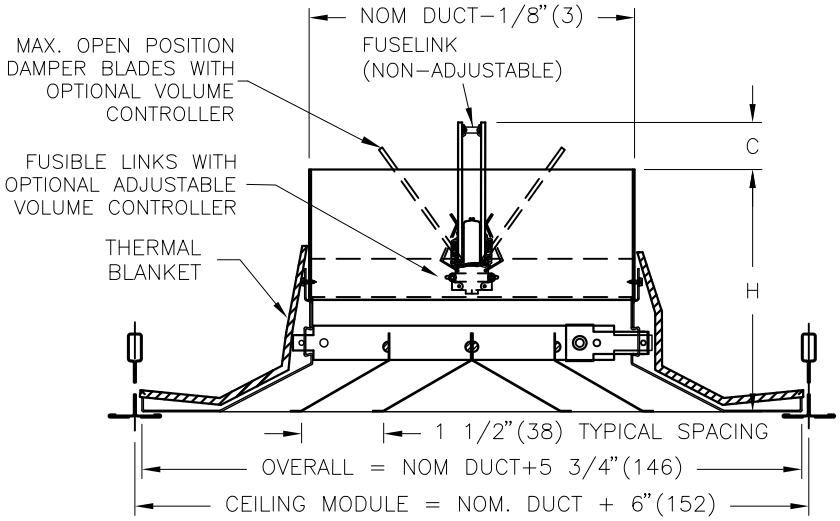

☐ **3P T-BAR PANEL**

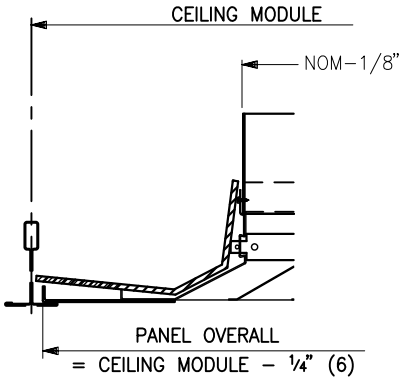

AVAILABLE DIFFUSER SIZE				
CEILING MODULE	BORDER STYLE 36		3P T−BAR LAY−IN PANEL OPTION	
	SQUARE NECK	ROUND NECK	SQUARE NECK	ROUND NECK
12X12 (305X305)	6X6 (152X152)	6 (152)	NA	NA
24X12 (610X305)	18X6 (457X152)	6 (152)	NA	NA
24X24 (610X610)	18X18 (457X457)	6,8,10,12,14,15 (152,203,254,305,356,381)	6X6,9X9,12X12,15X15 (152X152,229X229,305X305,381X381)	6,8,10,12,14,15 (152,203,254,305,356,381)

AVAILABLE CORE STYLES:

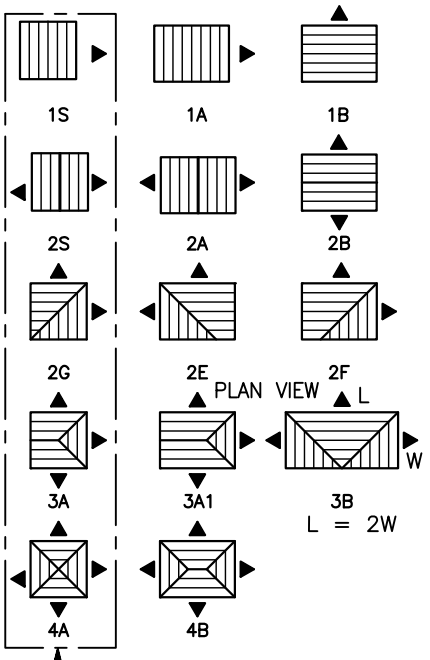

PANEL OPTION AVAILABLE IN SQUARE CORE STYLES ONLY

MATERIAL:

- STEEL CONSTRUCTION
- CEILING RADIATION DAMPER: GALVANIZED STEEL, BUTTERFLY TYPE.
- THERMAL BLANKET: NON ASBESTOS

FINISH:

☐ B12 WHITE (OPTIONAL FINISHES AVAILABLE)

OPTION:

☐ ADJUSTABLE VOLUME CONTROLLER (ALLEN KEY ADJUSTABLE)
☐ 165°F (74°C) FUSIBLE LINK (STANDARD)
☐ 212°F (100°C) FUSIBLE LINK

NOTE:

- FIRE RATED 3 HOUR.
- UL CLASSIFIED FIRE RATED CEILING DIFFUSER ASSEMBLY. LISTED IN UNDERWRITERS LABORATORIES FIRE RESISTANCE DIRECTORY.
- ULC CLASSIFIED FIRE RATED CEILING DIFFUSER ASSEMBLY. LISTED IN UNDERWRITERS OF CANADA LABORATORIES LIST OF EQUIPMENT AND MATERIALS.
- DIRECTIONAL CORE REMOVABLE AT DIFFUSER FACE
- DUCT: STEEL OR FLEXIBLE DUCT CONNECTIONS (BY OTHERS) AS PER FIRE RATED DESIGN REQUIREMENTS.
- INSTALLATION INSTRUCTIONS: 228792 OR FOR PANEL SEE SUBMITTAL 233667
- FIRE RATED DIFFUSERS ARE TO BE INSTALLED IN FIRE RATED T−BAR APPLICATIONS ONLY.

INLET	H
SQ. INLET	4"(102)
ROUND INLET	6½"(165)
SQ. C/W VOL. CONTROL	4¾"(121)
RND.C/W VOL. CONTROL	6½"(165)

ROUND NECK	
NOM. DUCT	C
6 (152)	1 (25)
8 (203)	2 (51)
10(254)	3 (76)
12(305)	4 (102)
14(356)	5 (127)
15(381)	5½ (140)

SQUARE NECK	
NOM. DUCT	C
6 X 6 (152 X 152)	2 (51)
9 X 9 (229 X 229)	3½ (89)
12 X 12 (305 X 305)	5 (127)
15 X 15 (381 X 381)	6½ (165)
18 X 6 (457 X 152)	2 (51)
18 X 18 (457 X 457)	8 (203)

CLASSIFIED C UL US

ALL METRIC DIMENSIONS ( ) ARE SOFT CONVERTED. IMPERIAL DIMENSIONS ARE CONVERTED TO METRIC AND ROUNDED TO THE NEAREST MILLIMETER.

PROJECT:		price®	
ENGINEER:		MG	**SMD-FR**
CUSTOMER:		228731	MODULAR DIFFUSER FIRE RATED
SUBMITTAL DATE:	**SPEC. SYMBOL:**	2015/03/31	

© Copyright PRICE INDUSTRIES 2015

REV F

price®

Submittal Sheet

SMDA-FR ADJUSTABLE MODULAR FIRE RATED DIFFUSER

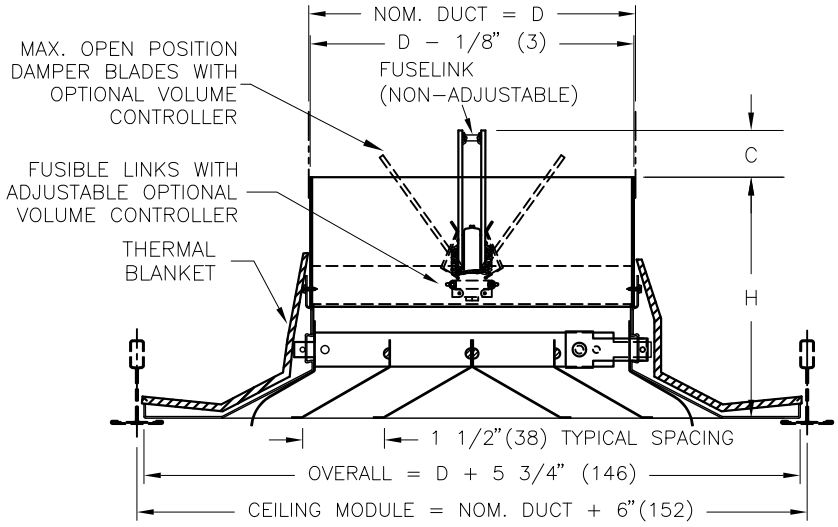

☐ **3P T-BAR PANEL**

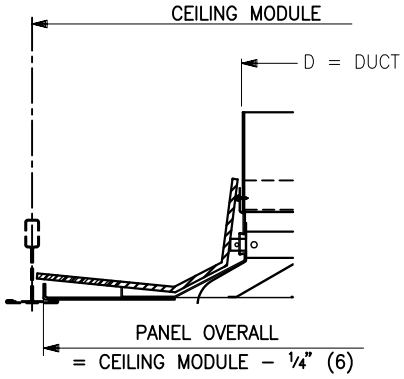

AVAILABLE DIFFUSER SIZE				
CEILING MODULE	BORDER STYLE 36		3P T–BAR LAY–IN PANEL OPTION	
	SQUARE NECK	ROUND NECK	SQUARE NECK	ROUND NECK
12X12 (305X305)	6X6 (152X152)	6 (152)	NA	NA
24X12 (610X305)	18X6 (457X152)	6 (152)	NA	NA
24X24 (610X610)	18X18 (457X457)	6,8,10,12,14,15 (152,203,254,305,356,381)	6X6,9X9,12X12,15X15 (152X152,229X229,305X305,381X381)	6,8,10,12,14,15 (152,203,254,305,356,381)

MATERIAL:
- STEEL CONSTRUCTION
- CEILING RADIATION DAMPER: GALVANIZED STEEL, BUTTERFLY TYPE
- THERMAL BLANKET: NON ASBESTOS

FINISH:
☐ B12 WHITE
(OPTIONAL FINISHES AVAILABLE)

OPTION:
☐ ADJUSTABLE VOLUME CONTROLLER (ALLEN KEY ADJUSTABLE)
☐ 165°F (74°C) FUSIBLE LINK (STANDARD)
☐ 212°F (100°C) FUSIBLE LINK

NOTE:
- FIRE RATED 3 HOUR.
- UL CLASSIFIED FIRE RATED CEILING DIFFUSER ASSEMBLY. LISTED IN UNDERWRITERS LABORATORIES FIRE RESISTANCE DIRECTORY.
- ULC CLASSIFIED FIRE RATED CEILING DIFFUSER ASSEMBLY. LISTED IN UNDERWRITERS OF CANADA LABORATORIES LIST OF EQUIPMENT AND MATERIALS.
- DIRECTIONAL CORE REMOVABLE AT DIFFUSER FACE.
- DUCT: STEEL OR FLEXIBLE DUCT CONNECTIONS (BY OTHERS) AS PER FIRE RATED DESIGN REQUIREMENTS.
- INSTALLATION INSTRUCTIONS: 228792 OR FOR PANEL SEE SUBMITTAL 233667
- FIRE RATED DIFFUSERS ARE TO BE INSTALLED IN FIRE RATED T–BAR APPLICATIONS ONLY.

AVAILABLE CORE STYLES:

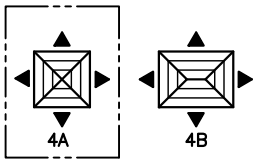

PANEL OPTION AVAILABLE IN SQUARE CORE STYLES ONLY

INLET	H
SQ. INLET	4"(102)
ROUND INLET	6½"(165)
SQ. C/W VOL. CONTROL	4¾"(121)
RND.C/W VOL. CONTROL	6½"(165)

ROUND NECK	
NOM. DUCT	C
6 (152)	1 (25)
8 (203)	2 (51)
10 (254)	3 (76)
12 (305)	4 (102)
14 (356)	5 (127)
15 (381)	5½ (140)

SQUARE NECK	
NOM. DUCT	C
6 X 6 (152 X 152)	2 (51)
9 X 9 (229 X 229)	3½ (89)
12 X 12 (305 X 305)	5 (127)
15 X 15 (381 X 381)	6½ (165)
18 X 6 (457 X 152)	2 (51)
18 X 18 (457 X 457)	8 (203)

CLASSIFIED c UL us

ALL METRIC DIMENSIONS ( ) ARE SOFT CONVERTED. IMPERIAL DIMENSIONS ARE CONVERTED TO METRIC AND ROUNDED TO THE NEAREST MILLIMETER.

PROJECT:		price®
ENGINEER:		MJ
CUSTOMER:		228732
SUBMITTAL DATE:	**SPEC. SYMBOL:**	2015/03/31

SMDA-FR
ADJUSTABLE MODULAR DIFFUSER FIRE RATED

© Copyright PRICE INDUSTRIES 2015

REV D

price®

Submittal Sheet

SMX-FR STEEL MODULAR FIRE RATED DIFFUSER

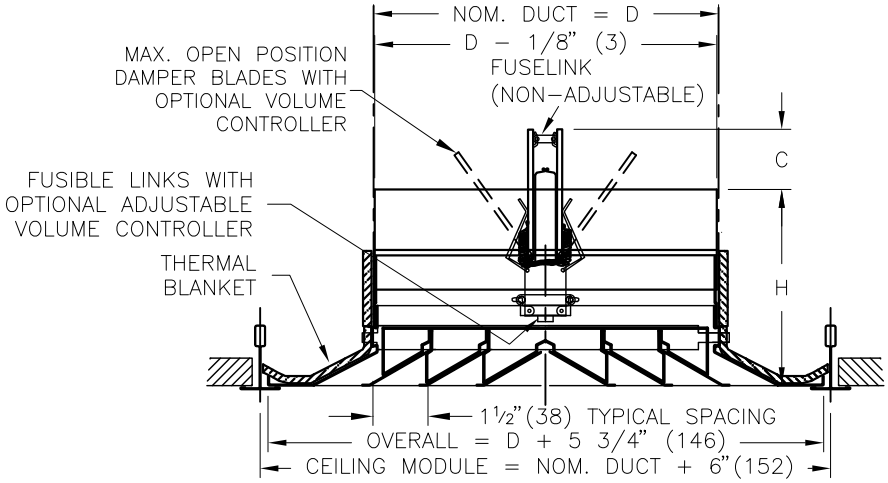

☐ **3P T-BAR PANEL**

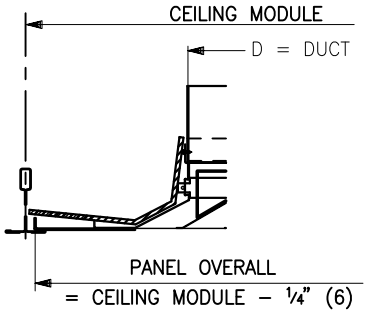

AVAILABLE DIFFUSER SIZE				
CEILING MODULE	BORDER STYLE 36		3P T–BAR LAY–IN PANEL OPTION	
	SQUARE NECK	ROUND NECK	SQUARE NECK	ROUND NECK
12X12 (305X305)	6X6 (152X152)	6 (152)	NA	NA
24X12 (610X305)	18X6 (457X152)	6 (152)	NA	NA
24X24 (610X610)	18X18 (457X457)	6,8,10,12,14,15 (152,203,254,305,356,381)	6X6,9X9,12X12,15X15 (152X152,229X229,305X305,381X381)	6,8,10,12,14,15 (152,203,254,305,356,381)

AVAILABLE CORE STYLES:

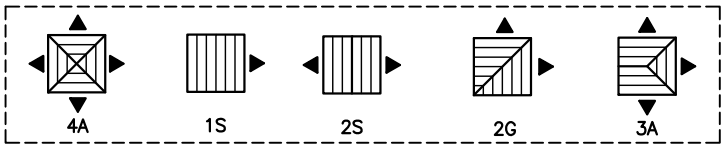

AVAILABLE IN SQUARE ONLY

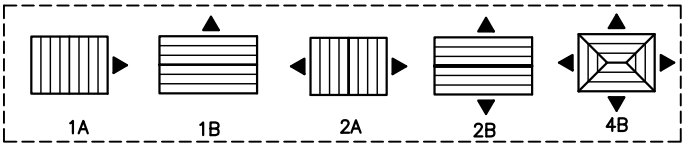

AVAILABLE IN RECTANGULAR ONLY

INLET	H
SQ. INLET	4"(102)
ROUND INLET	6½"(165)
SQ. C/W VOL. CONTROL	4¾"(121)
RND.C/W VOL. CONTROL	6½"(165)

ROUND NECK	
NOM. DUCT	C
6 (152)	1 (25)
8 (203)	2 (51)
10(254)	3 (76)
12(305)	4 (102)
14(356)	5 (127)
15(381)	5½ (140)

SQUARE NECK	
NOM. DUCT	C
6 X 6 (152 X 152)	2 (51)
9 X 9 (229 X 229)	3½ (89)
12 X 12 (305 X 305)	5 (127)
15 X 15 (381 X 381)	6½ (165)
18 X 6 (457 X 152)	2 (51)
18 X 18 (457 X 457)	8 (203)

MATERIAL:
- ALL STEEL CONSTRUCTION
- CEILING RADIATION DAMPER: GALVANIZED STEEL, BUTTERFLY TYPE
- THERMAL BLANKET: NON ASBESTOS

FINISH:
☐ B12 WHITE
(OPTIONAL FINISHES AVAILABLE)

OPTIONS:
☐ ROUNDED CORE CORNERS
☐ VOLUME ADJUSTMENT CONTROLLER (ALLEN KEY ADJUSTABLE)
☐ 165°F (74°C) FUSIBLE LINK (STANDARD)
☐ 212°F (100°C) FUSIBLE LINK

NOTE:
- CORES AVAILABLE IN INCREMENTS OF 3" (76) IN BOTH DIRECTIONS.
- FIRE RATED 3 HOUR.
- UL CLASSIFIED FIRE RATED CEILING DIFFUSER ASSEMBLY LISTED IN UNDERWRITERS LABORATORIES FIRE RESISTANCE DIRECTORY.
- ULC CLASSIFIED FIRE RATED CEILING DIFFUSER LISTED IN UNDERWRITERS OF CANADA LIST OF EQUIPMENT AND MATERIALS.
- DUCT: STEEL OR FLEX DUCT CONNECTIONS (BY OTHERS) AS PER FIRE RATED DESIGN REQUIREMENTS.
- INSTALLATION INSTRUCTIONS: 228792 OR FOR PANEL SEE SUBMITTAL 233667
- FIRE RATED DIFFUSERS ARE TO BE INSTALLED IN FIRE RATED T–BAR APPLICATIONS ONLY.

CLASSIFIED C UL US

ALL METRIC DIMENSIONS ( ) ARE SOFT CONVERTED. IMPERIAL DIMENSIONS ARE CONVERTED TO METRIC AND ROUNDED TO THE NEAREST MILLIMETER.

PROJECT:		price®	
ENGINEER:		MG	**SMX-FR** STEEL MODULAR DIFFUSER WITH MIXING VANES FIRE RATED
CUSTOMER:		228733	
SUBMITTAL DATE:	**SPEC. SYMBOL:**	2015/03/31	

© Copyright PRICE INDUSTRIES 2015

REV D

price®

Submittal Sheet

SCVD-FR STEEL CURVED VANE FIRE RATED DIFFUSER

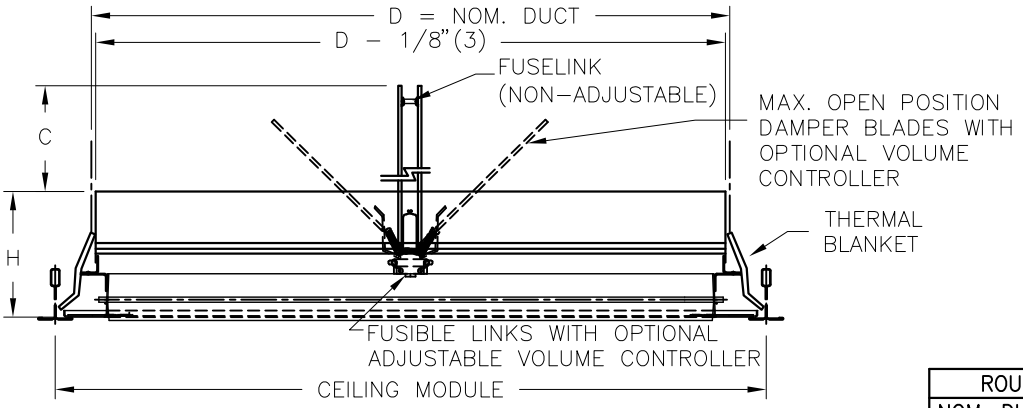

☐ **3P T-BAR PANEL**

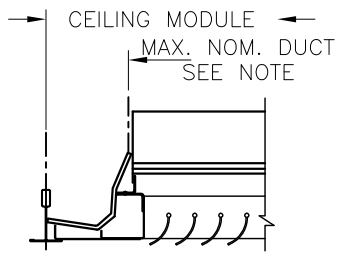

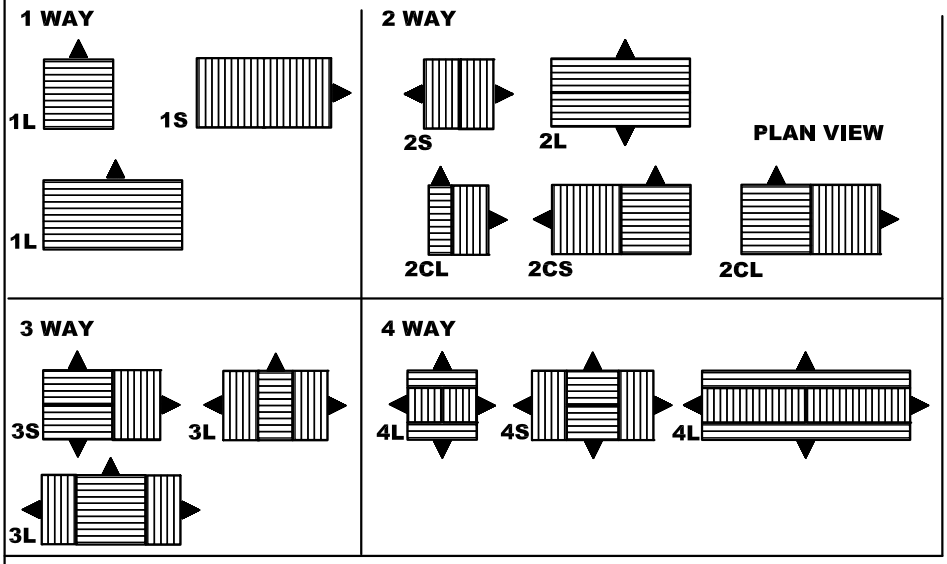

ROUND NECK	
NOM. DUCT	C
6 (152)	1 (25)
8 (203)	2 (51)
10 (254)	3 (76)
12 (305)	4 (102)
14 (356)	5 (127)
15 (381)	5½ (140)

SQUARE NECK	
NOM. DUCT	C
6 X 6 (152 X 152)	2 (51)
8 X 8 (203 X 203)	3 (76)
10 X 10 (254 X 254)	4 (102)
12 X 12 (305 X 305)	5 (127)
14 X 14 (356 X 356)	6 (152)
15 X 15 (381 X 381)	6½ (165)
16 X 16 (406 X 406)	7 (178)
18 X 18 (457 X 457)	8 (203)
20 X 20 (508 X 508)	9 (229)
22 X 22 (559 X 559)	10 (254)

SQUARE NECK
H = 4 (102)
ROUND NECK
H = 5 (127)

CEILING MODULE	BORDER STYLE 3 T–BAR LAY–IN	
	SQUARE NECK	ROUND NECK
12 X 12	6X6, 8X8, 10X10	6, 8, 10
24 X 24	6X6,8X8,10X10,12X12 14X14,15X15,16X16, 18X18,20X20,22X22	6,8,10,12,14,15

CEILING MODULE		3P T–BAR LAY–IN PANEL OPTION	
IMPERIAL	METRIC	SQUARE NECK	ROUND NECK
12 X 12	300X300	6X6, 8X8	6, 8
24 X 24	600X600	6X6,8X8,10X10,12X12 14X14,15X15,16X16, 18X18,20X20	6,8,10,12,14,15

NOTE:

- FIRE RATED 3 HOUR.
- UL CLASSIFIED FIRE RATED CEILING DIFFUSER ASSEMBLY. LISTED IN UNDERWRITERS LABORATORIES FIRE RESISTANCE DIRECTORY
- ULC CLASSIFIED FIRE RATED CEILING DIFFUSER ASSEMBLY LISTED IN UNDERWRITERS OF CANADA LABORATORIES LIST OF EQUIPMENT AND MATERIALS.
- SIZES 12x12, 20x20 & 24x24 AVAILABLE IN 1, 2, 3 & 4 WAY AIR PATTERNS.
- RECTANGULAR UNITS ARE AVAILABLE IN THE FOLLOWING LISTED DUCT DIMENSIONS: 18x6, 20x8, 22x10
- DUCT: STEEL OR FLEX DUCT CONNECTIONS (BY OTHERS) AS PER FIRE RATED DESIGN REQUIREMENTS.
- INSTALLATION INSTRUCTIONS: 228792 OR FOR PANEL SEE SUBMITAL 233667
- FIRE RATED DIFFUSERS ARE TO BE INSTALLED IN FIRE RATED T–BAR APPLICATIONS ONLY.

MATERIAL:

- STEEL CONSTRUCTION
- CEILING RADIATION DAMPER: GALZANIZED STEEL, BUTTERFLY TYPE
- THERMAL BLANKET: NON ASBESTOS

FINISH:

☐ B12 WHITE
(OPTIONAL FINISHES AVAILABLE)

OPTIONS:

☐ ADJUSTABLE VOLUME CONTROLLER (ALLEN KEY ADJUSTABLE)
☐ 165°F (74°C) FUSIBLE LINK (STANDA
☐ 212°F (100°C) FUSIBLE LINK

CLASSIFIED C UL US

ALL METRIC DIMENSIONS ( ) ARE SOFT CONVERTED. IMPERIAL DIMENSIONS ARE CONVERTED TO METRIC AND ROUNDED TO THE NEAREST MILLIMETER.

PROJECT:		price®	
ENGINEER:		MJ	**SCVD-FR** STEEL CURVED VANE FIRE RATED DIFFUSER
CUSTOMER:		233664	
SUBMITTAL DATE:	**SPEC. SYMBOL:**	2015/03/31	

© Copyright PRICE INDUSTRIES 2015

REV D